	Secuenciación Unidad de Control						Controles para la Ruta de Datos								
Instr.	**NA**	**MS**	**MC**	**IL**	**PI**	**PL**	**TD**	**TA**	**TB**	**MB**	**FS**	**MD**	**RW**	**MM**	**MW**
(a)	1 7	NXT	NXA	NLI	NLP	NLP	DR (3)	SA (1)	SB (2)	Reg.	$F=A+\overline{B}+1$	FnUt	WR	–	NW
(b)	–	CNT	–	NLI	NLP	NLP	DR (5)	SA (5)	–	–	F = sr A	FnUt	WR	–	NW
(c)	2 1	BNZ	NXA	NLI	NLP	NLP	–	–	–	–	–	–	NW	–	NW
(d)	–	CNT	–	NLI	NLP	NLP	–	SA (6)	SB (3)	Reg.	–	–	NW	MA	WR

(a) CAR←17, R3←R1-R2.
(b) CAR←CAR+1, R5←sr R5.
(c) Si (Z=0) entonces (CAR←21), si no (CAR←CAR+1).
(d) CAR←CAR+1, M[R6]←R3.

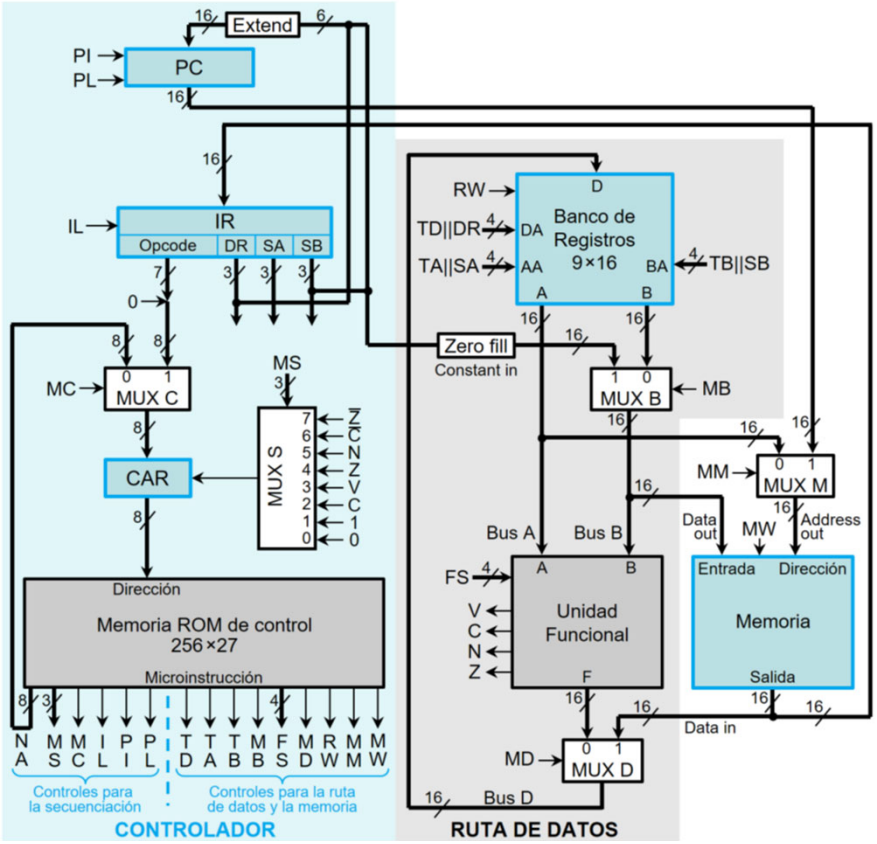

MS			MC	IL	PI	PL	
Action	**Select**	**Code**	**Select**	**Action**	**Action**	**Action**	**Code**
Increment CAR	CNT	000	NA (NXA)	No load (NLI)	No load (NLP)	No load (NLP)	0
Load CAR	NXT	001	Opcode (OPC)	Load instr. (LDI)	PC ← PC+1 (INP)	Load PC (LDP)	1
If $C = 1$ load CAR else CAR←CAR+1	BC	010					
If $V = 1$ load CAR else CAR←CAR+1	BV	011					
If $Z = 1$ load CAR else CAR←CAR+1	BZ	100					
If $N = 1$ load CAR else CAR←CAR+1	BN	101					
If $C = 0$ load CAR else CAR←CAR+1	BNC	110					
If $Z = 0$ load CAR else CAR←CAR+1	BNZ	111					

TD	TA	TB	MB		FS		MD	RW	MM	MW	
Select	**Select**	**Select**	**Select**	**Code**	**Function**	**Code**	**Select**	**Action**	**Select**	**Action**	**Code**
DR	SA	SB	Register	0	$F = A$	0000	FnUt	No write (NW)	Address (MA)	No Write (NW)	0
R8	R8	R8	Constant	1	$F = A+1$	0001	Data	Write (WR)	PC	Write (WR)	1
					$F = A+B$	0010					
					$F = A+B+1$	0011					
					$F = A+\overline{B}$	0100					
					$F = A+\overline{B}+1$	0101					
					$F = A-1$	0110					
					$F = A$	0111					
					$F = A \wedge B$	1000					
					$F = A \vee B$	1001					
					$F = A \oplus B$	1010					
					$F = \overline{A}$	1011					
					$F = B$	1100					
					$F = \text{sr } A$	1101					
					$F = \text{sl } A$	1110					